SERVICE & OPERATING MANUAL
Original Instructions

Certified Quality

Quality System
ISO 9001 Certified

Environmental Management System
ISO 14001 Certified

Warren Rupp, Inc.
A Unit of IDEX Corporation
800 N. Main St.,
Mansfield, Ohio 44902 USA
Telephone (419) 524.8388
Fax (419) 522.7867
WWW.SANDPIPERPUMP.COM

©2016 Warren Rupp, Inc.

Model ST1 & ST25
Containment Duty
Design Level 5

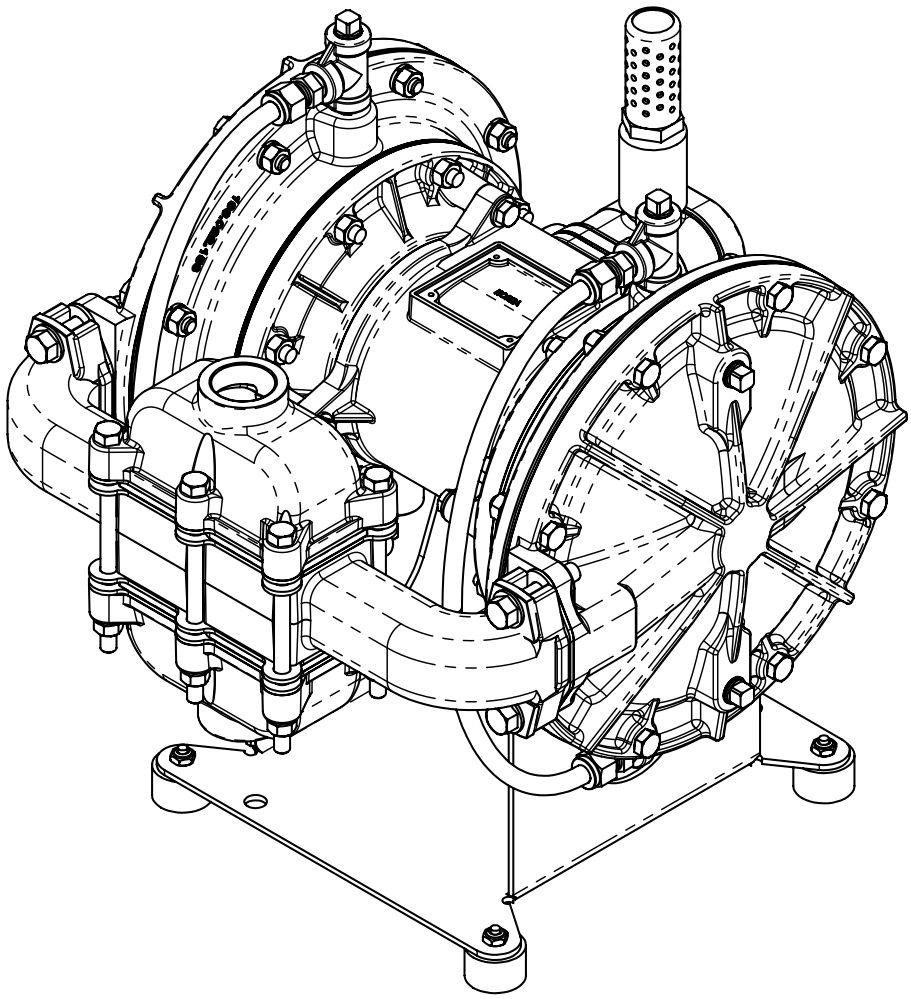

1: PUMP SPECS
2: INSTAL & OP
3: EXP VIEW
4: AIR END
5: WARRANTY

SANDPIPER®
A WARREN RUPP, INC. BRAND
WWW.SANDPIPERPUMP.COM

Safety Information

⚠ IMPORTANT

Read the safety warnings and instructions in this manual before pump installation and start-up. Failure to comply with the recommendations stated in this manual could damage the pump and void factory warranty.

When the pump is used for materials that tend to settle out or solidify, the pump should be flushed after each use to prevent damage. In freezing temperatures the pump should be completely drained between uses.

⚠ CAUTION

Before pump operation, inspect all fasteners for loosening caused by gasket creep. Retighten loose fasteners to prevent leakage. Follow recommended torques stated in this manual.

Nonmetallic pumps and plastic components are not UV stabilized. Ultraviolet radiation can damage these parts and negatively affect material properties. Do not expose to UV light for extended periods of time.

WARNING
Pump not designed, tested or certified to be powered by compressed natural gas. Powering the pump with natural gas will void the warranty.

⚠ WARNING

When used for toxic or aggressive fluids, the pump should always be flushed clean prior to disassembly.

Before maintenance or repair, shut off the compressed air line, bleed the pressure, and disconnect the air line from the pump. Be certain that approved eye protection and protective clothing are worn at all times. Failure to follow these recommendations may result in serious injury or death.

Airborne particles and loud noise hazards. Wear eye and ear protection.

In the event of diaphragm rupture, pumped material may enter the air end of the pump, and be discharged into the atmosphere. If pumping a product that is hazardous or toxic, the air exhaust must be piped to an appropriate area for safe containment.

Take action to prevent static sparking. Fire or explosion can result, especially when handling flammable liquids. The pump, piping, valves, containers and other miscellaneous equipment must be properly grounded.

This pump is pressurized internally with air pressure during operation. Make certain that all fasteners are in good condition and are reinstalled properly during reassembly.

Use safe practices when lifting

Grounding ATEX Pumps

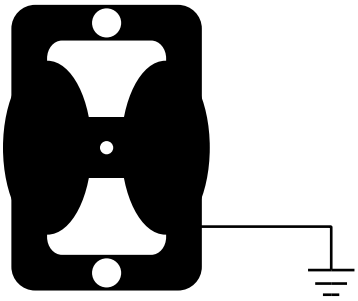

ATEX compliant pumps are suitable for use in explosive atmospheres when the equipment is properly grounded in accordance with local electrical codes. Pumps equipped with electrically conductive diaphragms are suitable for the transfer of conductive or non-conductive fluids of any explosion group. When operating pumps equipped with non-conductive diaphragms that exceed the maximum permissible projected area, as defined in EN 13461-1: 2009 section 6.7.5 table 9, the following protection methods must be applied:

- Equipment is always used to transfer electrically conductive fluids or
- Explosive environment is prevented from entering the internal portions of the pump, i.e. dry running

For further guidance on ATEX applications, please consult the factory.

Table of Contents

SECTION 1: PUMP SPECIFICATIONS.....1
- Explanation of Nomenclature
- Performance
- Materials
- Dimensional Drawings

SECTION 2: INSTALLATION & OPERATION.....4
- Principle of Pump Operation
- Recommended Installation Guide
- Filling the Driver Chambers with Fluid
- Troubleshooting Guide

SECTION 3: EXPLODED VIEW.....7
- Composite Repair Parts Drawing
- Composite Repair Parts List
- Material Codes

SECTION 4: AIR END.....11
- Air Distribution Valve Assembly
- Pilot Valve Assembly

SECTION 7: WARRANTY & CERTIFICATES 13
- Warranty
- CE Declaration of Conformity - Directive 2006/42/EC Machinery
- ATEX Declaration of Conformity - Directive 94/9/EC

Explanation of Pump Nomenclature

Your Model #: _____ _____ _____ _____ _____ _____ _____
(fill in from pump nameplate)

Pump Series	Pump Design	Pump Size and Options	Manifold Porting	Diaphragm/ Valve	Design Level	Construction

Model #: XX X XXXXXX, XX XXX X XX

Pump Series
S SANDPIPER®

Pump Design
T Spill Containment

Pump Size & Options
1 1" NPT
25 1" BSP Tapered

Options
VL Visual Leak Detection Sight Tubes

Manifold Porting Position
S Side

Diaphragm Check Valve Materials
NG Neoprene Driver Diaphragms, PTFE Pumping Diaphragms and PTFE Check Balls
VG FKM Driver Diaphragms / PTFE Pumping Diaphragms and PTFE Check Balls
GNG Neoprene Backup Diaphragms with PTFE Overlay Pumping Diaphragms / PTFE Pumping Diaphragms and PTFE Check Balls

Design Level
5

Construction
A Aluminum Wetted, Aluminum Air
SS Stainless Steel Wetted, Aluminum Air
HC Alloy-C Wetted, Aluminum Air

Your Serial #: *(fill in from pump nameplate)* _____

ATEX Detail

(1) II 2G c T5
II 2D c T100°C

Performance

ST1 & ST25 Containment Duty

SUCTION/DISCHARGE PORT SIZE
- ST1: 1" NPT (internal)
- ST25: 1" BSP Tapered (internal)

CAPACITY
- 0 to 42 gallons per minute (0 to 159 liters per minute)

AIR DISTRIBUTION VALVE
- No-lube, no-stall design

SOLIDS-HANDLING
- Occational solids only, to nearly .25" (6.3mm)

HEADS UP TO
- 125 psi or 289 ft. of water (8.8 Kg/cm^2 or 88 meters)

MAXIMUM OPERATING PRESSURE
- 125 psi (8.6 bar)

DISPLACEMENT/STROKE
- .09 Gallon / .34 liter

SHIPPING WEIGHT
- Aluminum 46 lbs. (20kg)
- Stainless Steel 67 lbs. (30kg)

MODEL ST1/ST25 Performance Curve

Performance based on the following: elastomer fitted pump, flooded suction, water at ambient conditions. The use of other materials and varying hydraulic conditions may result in deviations in excess of 5%.

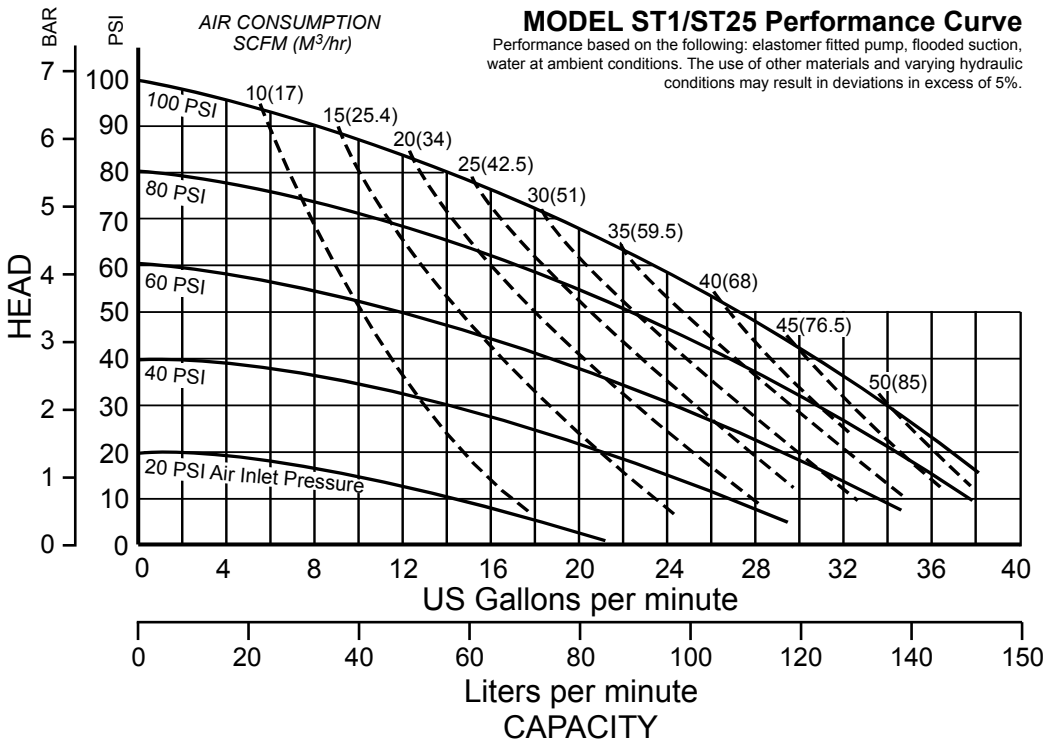

Materials

Material Profile:	Operating Temperatures: Max.	Operating Temperatures: Min.
⚠ *CAUTION! Operating temperature limitations are as follows:*		
Conductive Acetal: Tough, impact resistant, ductile. Good abrasion resistance and low friction surface. Generally inert, with good chemical resistance except for strong acids and oxidizing agents.	190°F 88°C	-20°F -29°C
EPDM: Shows very good water and chemical resistance. Has poor resistance to oils and solvents, but is fair in ketones and alcohols.	280°F 138°C	-40°F -40°C
FKM: (Fluorocarbon) Shows good resistance to a wide range of oils and solvents; especially all aliphatic, aromatic and halogenated hydrocarbons, acids, animal and vegetable oils. Hot water or hot aqueous solutions (over 70°F(21°C)) will attack FKM.	350°F 177°C	-40°F -40°C
Hytrel®: Good on acids, bases, amines and glycols at room temperatures only.	220°F 104°C	-20°F -29°C
Neoprene: All purpose. Resistance to vegetable oils. Generally not affected by moderate chemicals, fats, greases and many oils and solvents. Generally attacked by strong oxidizing acids, ketones, esters and nitro hydrocarbons and chlorinated aromatic hydrocarbons.	200°F 93°C	-10°F -23°C
Nitrile: General purpose, oil-resistant. Shows good solvent, oil, water and hydraulic fluid resistance. Should not be used with highly polar solvents like acetone and MEK, ozone, chlorinated hydrocarbons and nitro hydrocarbons.	190°F 88°C	-10°F -23°C
Nylon: 6/6 High strength and toughness over a wide temperature range. Moderate to good resistance to fuels, oils and chemicals.	180°F 82°C	32°F 0°C
Polypropylene: A thermoplastic polymer. Moderate tensile and flex strength. Resists stong acids and alkali. Attacked by chlorine, fuming nitric acid and other strong oxidizing agents.	180°F 82°C	32°F 0°C
PVDF: (Polyvinylidene Fluoride) A durable fluoroplastic with excellent chemical resistance. Excellent for UV applications. High tensile strength and impact resistance.	250°F 121°C	0°F -18°C
Santoprene®: Injection molded thermoplastic elastomer with no fabric layer. Long mechanical flex life. Excellent abrasion resistance.	275°F 135°C	-40°F -40°C
UHMW PE: A thermoplastic that is highly resistant to a broad range of chemicals. Exhibits outstanding abrasion and impact resistance, along with environmental stress-cracking resistance.	180°F 82°C	-35°F -37°C
Urethane: Shows good resistance to abrasives. Has poor resistance to most solvents and oils.	150°F 66°C	32°F 0°C
Virgin PTFE: (PFA/TFE) Chemically inert, virtually impervious. Very few chemicals are known to chemically react with PTFE; molten alkali metals, turbulent liquid or gaseous fluorine and a few fluoro-chemicals such as chlorine trifluoride or oxygen difluoride which readily liberate free fluorine at elevated temperatures.	220°F 104°C	-35°F -37°C

Maximum and Minimum Temperatures are the limits for which these materials can be operated. Temperatures coupled with pressure affect the longevity of diaphragm pump components. Maximum life should not be expected at the extreme limits of the temperature ranges.

Metals:

Alloy C: Equal to ASTM494 CW-12M-1 specification for nickel and nickel alloy.

Stainless Steel: Equal to or exceeding ASTM specification A743 CF-8M for corrosion resistant iron chromium, iron chromium nickel and nickel based alloy castings for general applications. Commonly referred to as 316 Stainless Steel in the pump industry.

For specific applications, always consult the Chemical Resistance Chart.

Ambient temperature range: -20°C to +40°C
Process temperature range: -20°C to +80°C for models rated as category 1 equipment
-20°C to +100°C for models rated as category 2 equipment

In addition, the ambient temperature range and the process temperature range do not exceed the operating temperature range of the applied non-metallic parts as listed in the manuals of the pumps.

Dimensional Drawings

ST1 & ST25 Containment Duty

Dimensions are ±1/8". Figures in parentheses = millimeters.

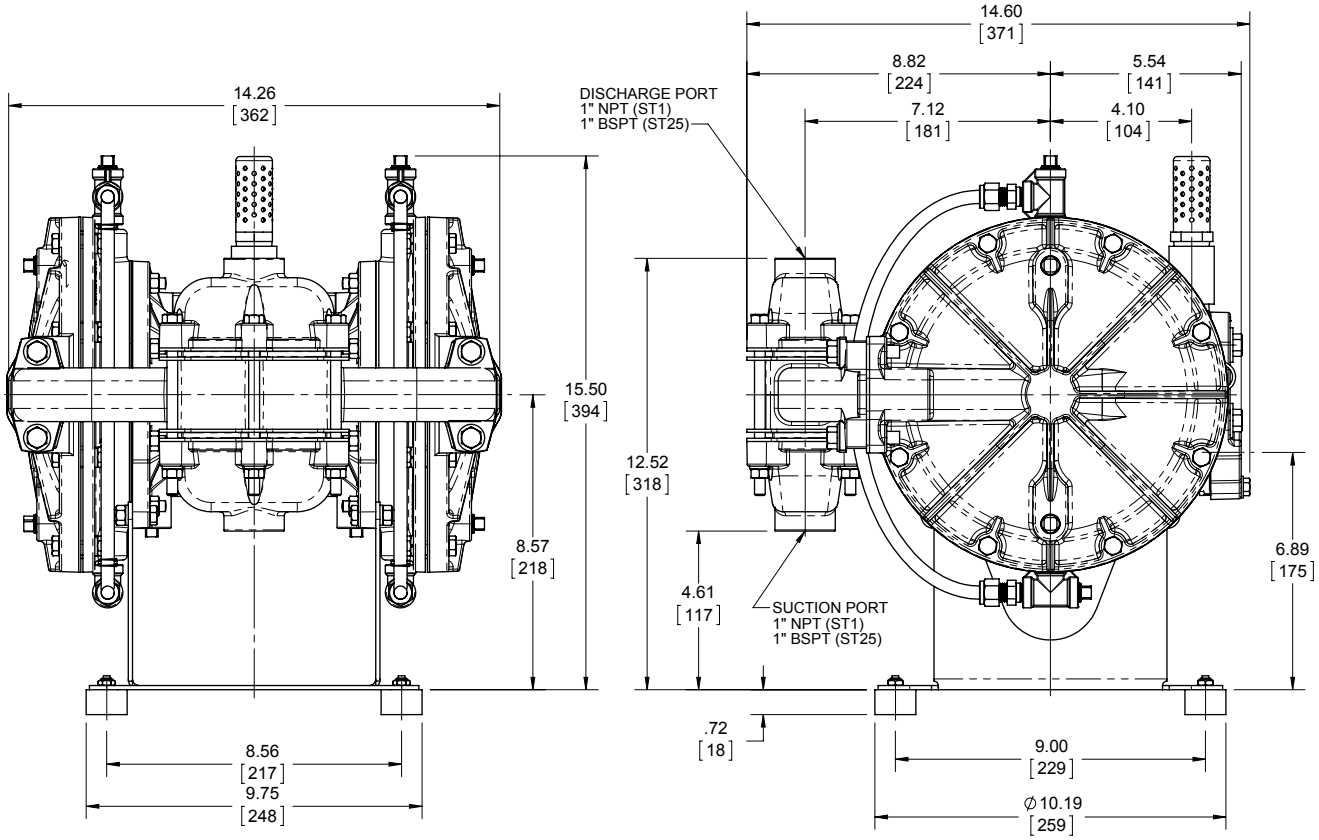

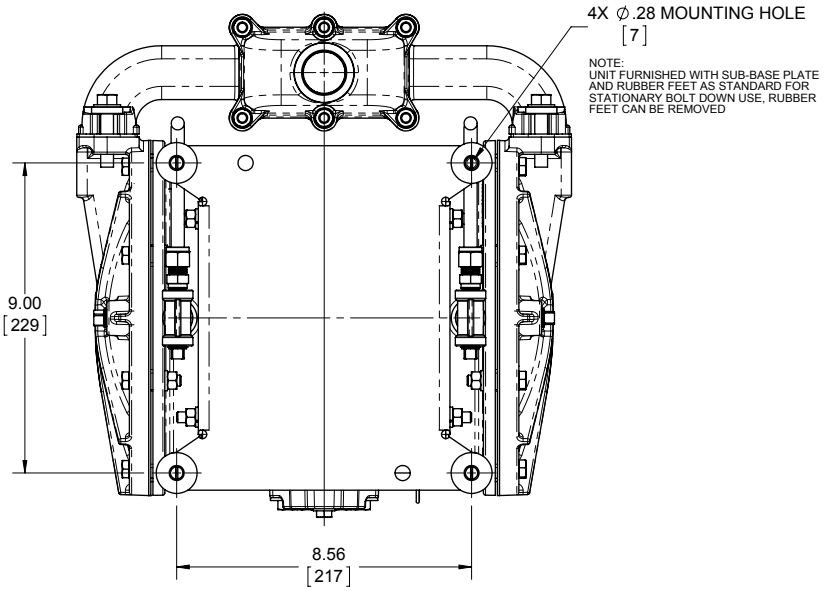

Principle of Pump Operation

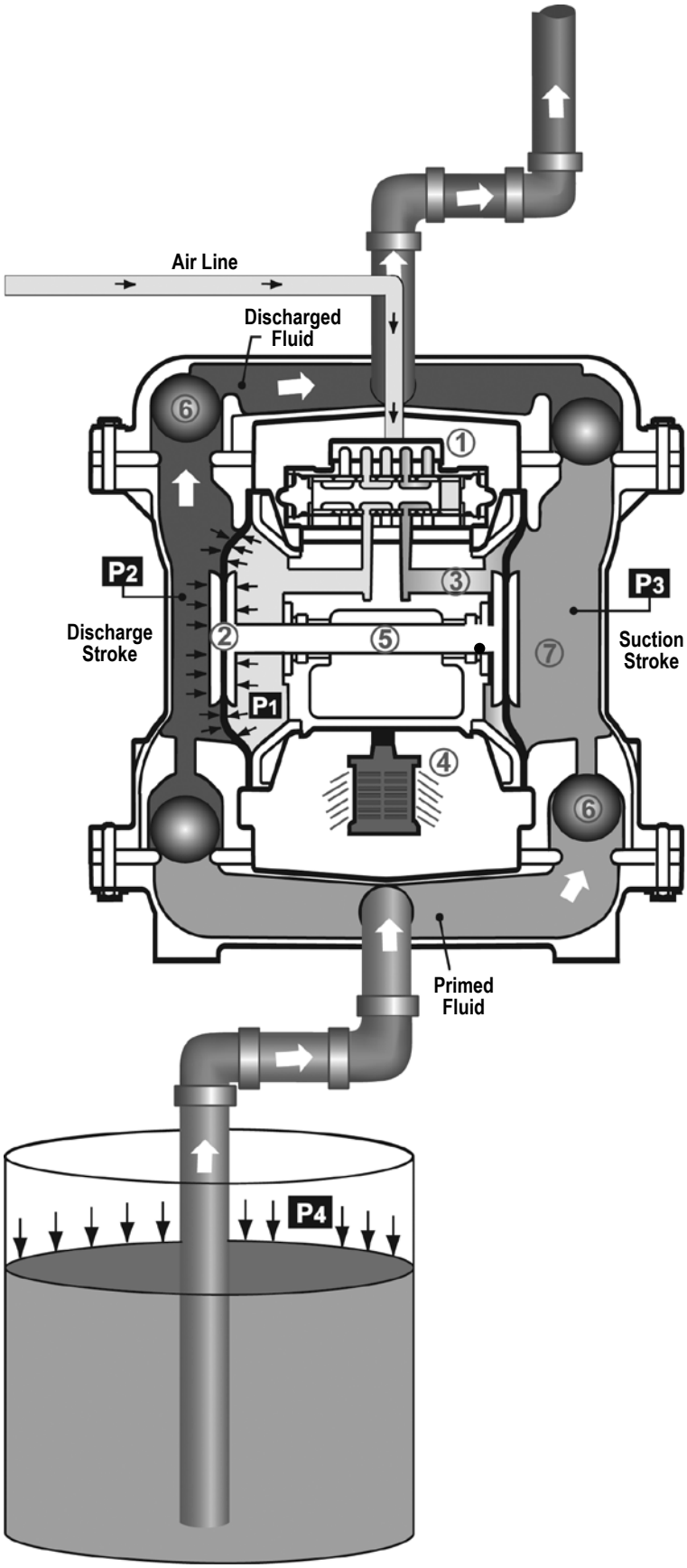

Air-Operated Double Diaphragm (AODD) pumps are powered by compressed air or nitrogen.

The main directional (air) control valve ① distributes compressed air to an air chamber, exerting uniform pressure over the inner surface of the diaphragm ②. At the same time, the exhausting air ③ from behind the opposite diaphragm is directed through the air valve assembly(s) to an exhaust port ④.

As inner chamber pressure **(P1)** exceeds liquid chamber pressure **(P2)**, the rod ⑤ connected diaphragms shift together creating discharge on one side and suction on the opposite side. The discharged and primed liquid's directions are controlled by the check valves (ball or flap)⑥ orientation.

The pump primes as a result of the suction stroke. The suction stroke lowers the chamber pressure **(P3)** increasing the chamber volume. This results in a pressure differential necessary for atmospheric pressure **(P4)** to push the fluid through the suction piping and across the suction side check valve and into the outer fluid chamber ⑦.

Suction (side) stroking also initiates the reciprocating (shifting, stroking or cycling) action of the pump. The suction diaphragm's movement is mechanically pulled through its stroke. The diaphragm's inner plate makes contact with an actuator plunger aligned to shift the pilot signaling valve. Once actuated, the pilot valve sends a pressure signal to the opposite end of the main directional air valve, redirecting the compressed air to the opposite inner chamber.

SUBMERGED ILLUSTRATION

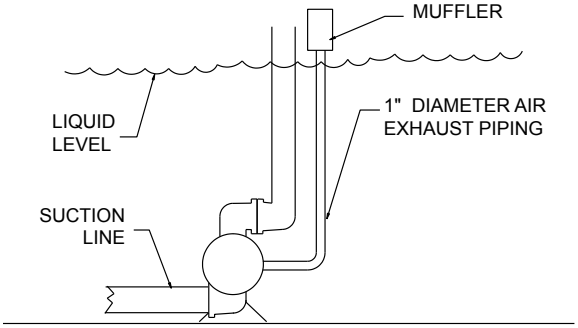

Pump can be submerged if the pump materials of construction are compatible with the liquid being pumped. The air exhaust must be piped above the liquid level. When the pumped product source is at a higher level than the pump (flooded suction condition), pipe the exhaust higher than the product source to prevent siphoning spills.

Recommended Installation Guide

Available Accessories:

1. Surge Suppressor
2. Filter/Regulator
3. Air Dryer

Note: Surge Suppressor and Piping must be supported after the flexible connection

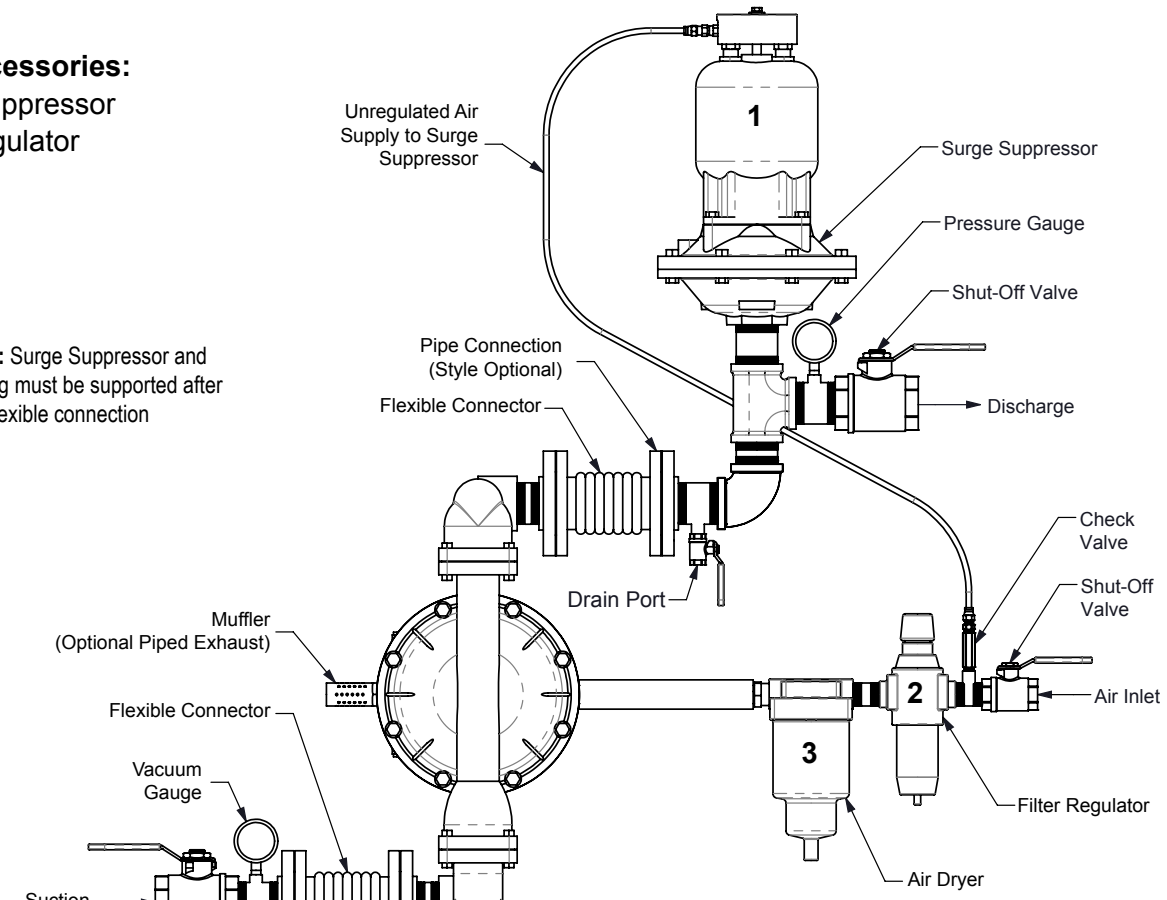

CAUTION

The air exhaust should be piped to an area for safe disposition of the product being pumped, in the event of a diaphragm failure.

Installation And Start-Up

Locate the pump as close to the product being pumped as possible. Keep the suction line length and number of fittings to a minimum. Do not reduce the suction line diameter.

Air Supply

Connect the pump air inlet to an air supply with sufficient capacity and pressure to achieve desired performance. A pressure regulating valve should be installed to insure air supply pressure does not exceed recommended limits.

Air Valve Lubrication

The air distribution system is designed to operate WITHOUT lubrication. This is the standard mode of operation. If lubrication is desired, install an air line lubricator set to deliver one drop of SAE 10 non-detergent oil for every 20 SCFM (9.4 liters/sec.) of air the pump consumes. Consult the Performance Curve to determine air consumption.

Air Line Moisture

Water in the compressed air supply may cause icing or freezing of the exhaust air, causing the pump to cycle erratically or stop operating. Water in the air supply can be reduced by using a point-of-use air dryer.

Air Inlet And Priming

To start the pump, slightly open the air shut-off valve. After the pump primes, the air valve can be opened to increase air flow as desired. If opening the valve increases cycling rate, but does not increase the rate of flow, cavitation has occurred. The valve should be closed slightly to obtain the most efficient air flow to pump flow ratio.

Filling the Driver Chambers with Liquid

THE DRIVER CHAMBERS WILL BE FILLED WITH DISTILLED WATER AT THE FACTORY.

If you need to substitute another liquid to prevent system contamination, first consult the factory for chemical compatibility with pump construction.

Follow the steps listed below to replace the liquid in the pump after disassembly or liquid loss:

Step 1. Filling is accomplished through the pipe plugs at the top of the liquid chamber. Drain ports are at the bottom of the liquid chamber.

Step 2. After the driver fluid has been emptied from the pump, the driver diaphragms will naturally come to center.

Step 3. Remove the entire manifold assembly exposing the ports in the outer diaphragm chambers.

Step 4. For pumps not equipped with Visual Leak Detection sight tubes, fill with 722ml/ 24.6 fl. oz.

For pumps equipped with Visual Leak Detection sight tubes, fill with 752ml/ 25.4 fl. oz.

It is imperative that the driver liquid chambers be filled with the correct amount of driver liquid as too little or too much will cause premature diaphragm failure and erratic pumping.

Step 5. After filling with the proper amount of liquid, if the liquid does not come to the top of the fill hole, pressure should be applied to the PTFE diaphragm with a blunt tool through the material flow port in the outer chamber until the liquid comes to the top. If the main air valve body and pilot valve are removed, the diaphragm rod will be visible in the intermediate bracket. The hole in the diaphragm rod will assist manual movement. Use a long taper punch to move the diaphragm rod.

Step 6. When the driver fluid rises to the top of the fill plug hole, apply pipe dope to the pipe plug, and thread it into the chamber plug hole. (Do not use PTFE tape.) Keep pressure on the PTFE diaphragm until the pipe plug is tight to prevent air from drawing back into the chamber.

Step 7. Repeat the filling procedure for opposite side.

Troubleshooting Guide

Symptom:	Potential Cause(s):	Recommendation(s):
Pump Cycles Once	Deadhead (system pressure meets or exceeds air supply pressure).	Increase the inlet air pressure to the pump. Pump is designed for 1:1 pressure ratio at zero flow. (Does not apply to high pressure 2:1 units).
	Air valve or intermediate gaskets installed incorrectly.	Install gaskets with holes properly aligned.
	Bent or missing actuator plunger.	Remove pilot valve and inspect actuator plungers.
Pump Will Not Operate / Cycle	Pump is over lubricated.	Set lubricator on lowest possible setting or remove. Units are designed for lube free operation.
	Lack of air (line size, PSI, CFM).	Check the air line size and length, compressor capacity (HP vs. cfm required).
	Check air distribution system.	Disassemble and inspect main air distribution valve, pilot valve and pilot valve actuators.
	Discharge line is blocked or clogged manifolds.	Check for inadvertently closed discharge line valves. Clean discharge manifolds/piping.
	Deadhead (system pressure meets or exceeds air supply pressure).	Increase the inlet air pressure to the pump. Pump is designed for 1:1 pressure ratio at zero flow. (Does not apply to high pressure 2:1 units).
	Blocked air exhaust muffler.	Remove muffler screen, clean or de-ice, and re-install.
	Pumped fluid in air exhaust muffler.	Disassemble pump chambers. Inspect for diaphragm rupture or loose diaphragm plate assembly.
	Pump chamber is blocked.	Disassemble and inspect wetted chambers. Remove or flush any obstructions.
Pump Cycles and Will Not Prime or No Flow	Cavitation on suction side.	Check suction condition (move pump closer to product).
	Check valve obstructed. Valve ball(s) not seating properly or sticking.	Disassemble the wet end of the pump and manually dislodge obstruction in the check valve pocket. Clean out around valve ball cage and valve seat area. Replace valve ball or valve seat if damaged. Use heavier valve ball material.
	Valve ball(s) missing (pushed into chamber or manifold).	Worn valve ball or valve seat. Worn fingers in valve ball cage (replace part). Check Chemical Resistance Guide for compatibility.
	Valve ball(s) / seat(s) damaged or attacked by product.	Check Chemical Resistance Guide for compatibility.
	Check valve and/or seat is worn or needs adjusting.	Inspect check valves and seats for wear and proper setting. Replace if necessary.
	Suction line is blocked.	Remove or flush obstruction. Check and clear all suction screens or strainers.
	Excessive suction lift.	For lifts exceeding 20' of liquid, filling the chambers with liquid will prime the pump in most cases.
	Suction side air leakage or air in product.	Visually inspect all suction-side gaskets and pipe connections.
	Pumped fluid in air exhaust muffler.	Disassemble pump chambers. Inspect for diaphragm rupture or loose diaphragm plate assembly.
Pump Cycles Running Sluggish / Stalling, Flow Unsatisfactory	Over lubrication.	Set lubricator on lowest possible setting or remove. Units are designed for lube free operation.
	Icing.	Remove muffler screen, de-ice, and re-install. Install a point of use air drier.
	Clogged manifolds.	Clean manifolds to allow proper air flow.
	Deadhead (system pressure meets or exceeds air supply pressure).	Increase the inlet air pressure to the pump. Pump is designed for 1:1 pressure ratio at zero flow. (Does not apply to high pressure 2:1 units).
	Cavitation on suction side.	Check suction (move pump closer to product).
	Lack of air (line size, PSI, CFM).	Check the air line size, length, compressor capacity.
	Excessive suction lift.	For lifts exceeding 20' of liquid, filling the chambers with liquid will prime the pump in most cases.
	Air supply pressure or volume exceeds system hd.	Decrease inlet air (press. and vol.) to the pump. Pump is cavitating the fluid by fast cycling.
	Undersized suction line.	Meet or exceed pump connections.
	Restrictive or undersized air line.	Install a larger air line and connection.
	Suction side air leakage or air in product.	Visually inspect all suction-side gaskets and pipe connections.
	Suction line is blocked.	Remove or flush obstruction. Check and clear all suction screens or strainers.
	Pumped fluid in air exhaust muffler.	Disassemble pump chambers. Inspect for diaphragm rupture or loose diaphragm plate assembly.
	Check valve obstructed.	Disassemble the wet end of the pump and manually dislodge obstruction in the check valve pocket.
	Check valve and/or seat is worn or needs adjusting.	Inspect check valves and seats for wear and proper setting. Replace if necessary.
	Entrained air or vapor lock in chamber(s).	Purge chambers through tapped chamber vent plugs. Purging the chambers of air can be dangerous.
Product Leaking Through Exhaust	Diaphragm failure, or diaphragm plates loose.	Replace diaphragms, check for damage and ensure diaphragm plates are tight.
	Diaphragm stretched around center hole or bolt holes.	Check for excessive inlet pressure or air pressure. Consult Chemical Resistance Chart for compatibility with products, cleaners, temperature limitations and lubrication.
Premature Diaphragm Failure	Cavitation.	Enlarge pipe diameter on suction side of pump.
	Excessive flooded suction pressure.	Move pump closer to product. Raise pump/place pump on top of tank to reduce inlet pressure. Install Back pressure device (Tech bulletin 41r). Add accumulation tank or pulsation dampener.
	Misapplication (chemical/physical incompatibility).	Consult Chemical Resistance Chart for compatibility with products, cleaners, temperature limitations and lubrication.
	Incorrect diaphragm plates or plates on backwards, installed incorrectly or worn.	Check Operating Manual to check for correct part and installation. Ensure outer plates have not been worn to a sharp edge.
Unbalanced Cycling	Excessive suction lift.	For lifts exceeding 20' of liquid, filling the chambers with liquid will prime the pump in most cases.
	Undersized suction line.	Meet or exceed pump connections.
	Pumped fluid in air exhaust muffler.	Disassemble pump chambers. Inspect for diaphragm rupture or loose diaphragm plate assembly.
	Suction side air leakage or air in product.	Visually inspect all suction-side gaskets and pipe connections.
	Check valve obstructed.	Disassemble the wet end of the pump and manually dislodge obstruction in the check valve pocket.
	Check valve and/or seat is worn or needs adjusting.	Inspect check valves and seats for wear and proper setting. Replace if necessary.
	Entrained air or vapor lock in chamber(s).	Purge chambers through tapped chamber vent plugs.

For additional troubleshooting tips contact After Sales Support at service.warrenrupp@idexcorp.com or 419-524-8388

Composite Repair Parts Drawing

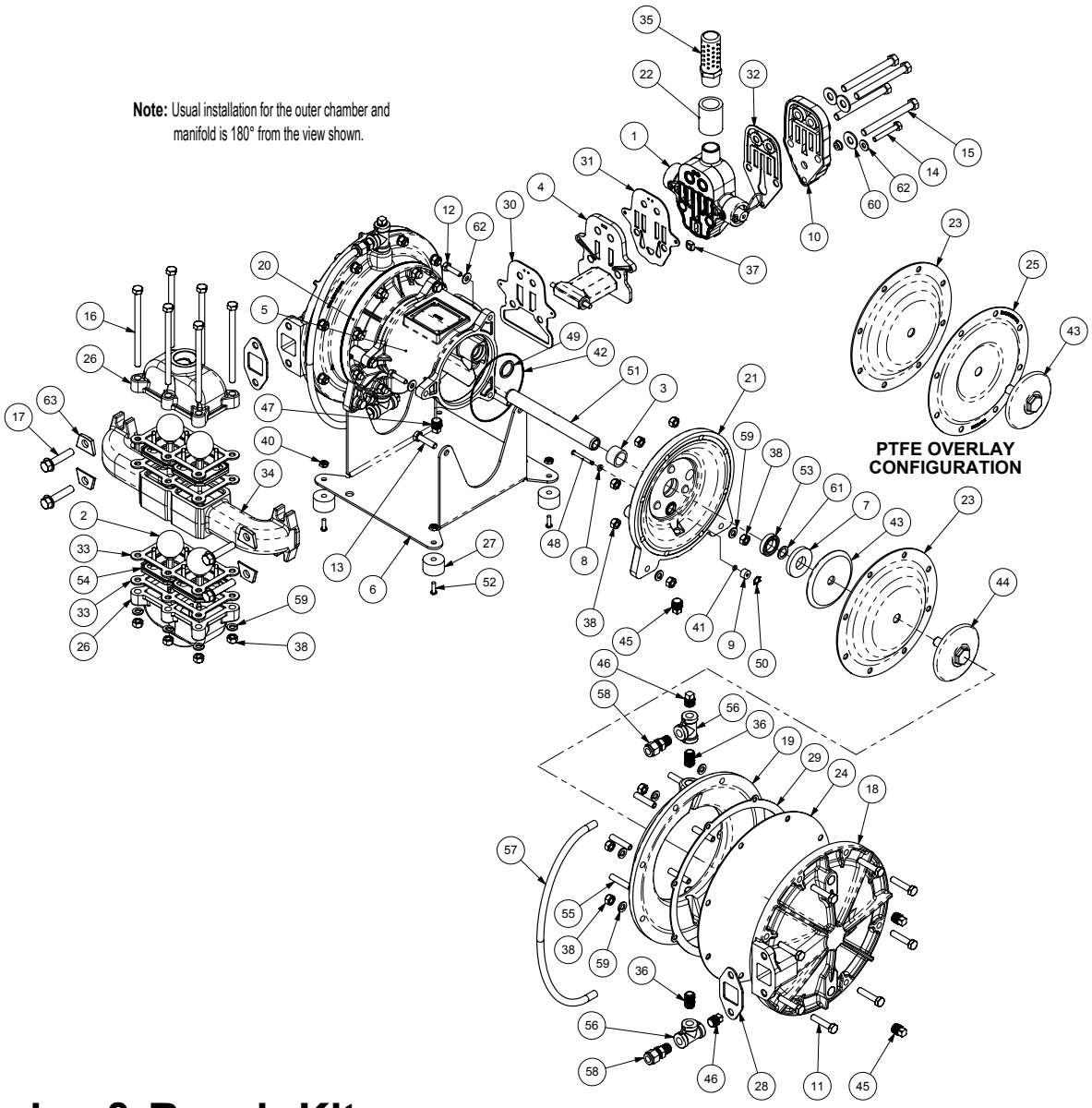

Service & Repair Kits

476.130.000 AIR END KIT
Sleeve and Spool Set, Seals, Gaskets, O-rings,Bumpers, Plunger Actuators, Plunger Bushings, Retaining Rings, and Pilot Valve Assembly

476.317.000 AIR END WEAR KIT
Seals, Gaskets, O-rings, Grease Packet Bumpers, Plunger Actuators, Plunger Bushings and Retaining Rings

476.310.365 WET END KIT
Neoprene Driver Diaphragms, PTFE Pumping Diaphragms, PTFE Check Balls, PTFE Gaskets, Copper Washers, and Neoprene Diaphragm Gaskets

476.310.637 WET END KIT
FKM Driver Diaphragms, PTFE Pumping Diaphragms, PTFE Check Balls, PTFE Gaskets, Copper Washers, and FKM Diaphragm Gaskets

476.310.640 WET END KIT
Neoprene Driver Diaphragms, PTFE Overlay Diaphragms, PTFE Pumping Diaphragms, PTFE Check Balls, PTFE Gaskets, Copper Washers, and Neoprene Diaphragm Gaskets

IMPORTANT NOTE: Polypropylene pumps are shipped with the 1/2" NPT Pipe Plug installed in the end ports of both suction and discharge one-piece manifolds. To convert to the Inline porting positions for pump installation and operation, first remove the pipe plugs and re-install in the center ports. Apply PTFE tape or pipe sealant to threads of the plug before installation.

Composite Repair Parts List

Item	Part Number	Description	Qty.
1	031.111.557	ASSEMBLY, AIR VALVE	1
2	050.011.600	BALL, CHECK	4
3	070.012.170	BEARING, SLEEVE	2
4	095.074.001	PILOT VALVE ASSEMBLY	1
5	114.007.157	INTERMEDIATE	1
6	115.071.330	BRACKET, MOUNTING	1
7	132.019.360	BUMPER	2
8	132.022.360	BUMPER, ACTUATOR	2
9	135.034.506	BUSHING, PLUNGER	2
10	165.134.157	CAP, AIR INLET, ASS'Y	1
10.1	165.042.157	CAP, AIR INLET	1
10.2	559.017.506	ORIFICE	1
11	170.029.115	CAPSCREW, HEX HD, 5/16-18 X 1.50	16
12	170.043.115	CAPSCREW, HEX HD, 1/4-20 X 1.00	6
13	170.045.115	CAPSCREW, HEX HEAD 5/16-18 X 1 1/4	4
14	170.063.330	CAPSCREW, HEX HD, 1/4-20 X 1.75	1
15	170.033.115	CAPSCREW, HEX HD, 3/8-16 UNC X 3.00	4
16	170.122.115	CAPSCREW, HEX HD, 5/16-18 X 5.00	6
17	171.010.115	CAPSCREW, FLANGE LOCK, 3/8-16 UNC X 1.75	4
18	196.021.110	CHAMBER, OUTER	2
18	196.021.112	CHAMBER, OUTER	2
19	196.022.156	CHAMBER, OUTER	2
20	196.042.157	CHAMBER, INNER	1
21	196.043.157	CHAMBER, INNER	1
22	255.012.335	COUPLING, PIPE, 3/4 NPT	1
23	286.008.363	DIAPHRAGM	2
	286.008.365	DIAPHRAGM	2
24	286.009.604	DIAPHRAGM, PUMPING	2
25	286.015.604	DIAPHRAGM, OVERLAY	2
26	334.013.110	FLANGE, PORTING	2
	334.013.112	FLANGE, PORTING	2
	334.013.157	FLANGE, PORTING	2
	334.013.110 E	FLANGE, PORTING - BSP TAPERED	2
	334.013.112 E	FLANGE, PORTING - BSP TAPERED	2
	334.013.157 E	FLANGE, PORTING - BSP TAPERED	2
27	350.002.360	FOOT, RUBBER	4
28	360.030.600	GASKET, MANIFOLD	2
29	360.039.363	GASKET, DIAPHRAGM	2
	360.039.365	GASKET, DIAPHRAGM	2
30	360.056.379	GASKET	1
31	360.057.360	GASKET	1
32	360.058.360	GASKET	1
33	360.115.608	GASKET, FLANGE	4
34	518.020.110	MANIFOLD	1
	518.020.112	MANIFOLD	1
35	530.036.000	MUFFLER	1
36	538.083.110	NIPPLE, PIPE, 1/4" NPT, CLOSE	4
37	542.001.115	NUT, SQUARE	1
38	545.004.115	NUT, HEX, 5/16-18	42
39	545.005.330	NUT, HEX	1
40	547.002.110	NUT, STOP	4
41	560.001.360	O-RING	2
42	560.040.360	O-RING	2
43	612.022.330	PLATE, DIAPHRAGM, INNER	2
44	612.101.110	ASSEMBLY, DIAPHRAGM PLATE	2
	612.101.112	ASSEMBLY, DIAPHRAGM PLATE	2
	612.108.157	ASSEMBLY, DIAPHRAGM PLATE	2
45	618.003.110	PLUG, PIPE, 1/4	4
	618.003.112	PLUG, PIPE, 1/4	4
46	618.003.110	PLUG, PIPE, 1/4	6
47	618.003.330	PLUG, PIPE, 1/4	1
48	620.007.114	PLUNGER, ACTUATOR	2
49	675.040.360	RING, SEALING	2
50	675.042.115	RING, RETAINING	2
51	685.039.120	ROD, DIAPHRAGM	1
52	706.013.330	SCREW, MACHINE	4
53	720.010.375	SEAL, U-CUP	2
54	722.102.110	SEAT, CHECK VALVE	2
	722.102.112	SEAT, CHECK VALVE	2
55	807.024.115	STUD, 5/16-18	16
56	835.005.110	TEE, PIPE, 1/4 NPT	4
57	860.065.606	TUBE	2
58	866.060.110	CONNECTOR, TUBE	4
59	900.004.115	WASHER, LOCK, 5/16	26
60	901.005.115	WASHER, FLAT, 3/8	4
61	901.012.180	WASHER, SEALING	2
62	901.035.115	WASHER, FLAT, 1/4	7
63	905.001.115	WASHER, TAPER	4

LEGEND:

○ = Items contained within Air End Kits

□ = Items contianed within Wet End Kits

Note: *Kits contain components specific to the material codes.*

Parts underlined are only available for sale in kits

SANDPIPER®
A WARREN RUPP, INC. BRAND

Material Codes - The Last 3 Digits of Part Number

000.....Assembly, sub-assembly; and some purchased items
010.....Cast Iron
015.....Ductile Iron
020.....Ferritic Malleable Iron
080.....Carbon Steel, AISI B-1112
110.....Alloy Type 316 Stainless Steel
111.....Alloy Type 316 Stainless Steel (Electro Polished)
112.....Alloy C
113.....Alloy Type 316 Stainless Steel (Hand Polished)
114.....303 Stainless Steel
115.....302/304 Stainless Steel
117.....440-C Stainless Steel (Martensitic)
120.....416 Stainless Steel (Wrought Martensitic)
148.....Hardcoat Anodized Aluminum
150.....6061-T6 Aluminum
152.....2024-T4 Aluminum (2023-T351)
155.....356-T6 Aluminum
156.....356-T6 Aluminum
157.....Die Cast Aluminum Alloy #380
158.....Aluminum Alloy SR-319
162.....Brass, Yellow, Screw Machine Stock
165.....Cast Bronze, 85-5-5-5
166.....Bronze, SAE 660
170.....Bronze, Bearing Type, Oil Impregnated
180.....Copper Alloy
305.....Carbon Steel, Black Epoxy Coated
306.....Carbon Steel, Black PTFE Coated
307.....Aluminum, Black Epoxy Coated
308.....Stainless Steel, Black PTFE Coated
309.....Aluminum, Black PTFE Coated
313.....Aluminum, White Epoxy Coated
330.....Zinc Plated Steel
332.....Aluminum, Electroless Nickel Plated
333.....Carbon Steel, Electroless Nickel Plated
335.....Galvanized Steel
337.....Silver Plated Steel
351.....Food Grade Santoprene®
353.....Geolast; Color: Black
354.....Injection Molded #203-40 Santoprene® Duro 40D +/-5; Color: RED
356.....Hytrel®
357.....Injection Molded Polyurethane
358.....Urethane Rubber (Some Applications) (Compression Mold)
359.....Urethane Rubber
360.....Nitrile Rubber Color coded: RED
363.....FKM (Fluorocarbon) Color coded: YELLOW
364.....EPDM Rubber Color coded: BLUE
365.....Neoprene Rubber Color coded: GREEN
366.....Food Grade Nitrile
368.....Food Grade EPDM
371.....Philthane (Tuftane)
374.....Carboxylated Nitrile
375.....Fluorinated Nitrile
378.....High Density Polypropylene
379.....Conductive Nitrile
408.....Cork and Neoprene
425.....Compressed Fibre
426.....Blue Gard
440.....Vegetable Fibre
500.....Delrin® 500
502.....Conductive Acetal, ESD-800
503.....Conductive Acetal, Glass-Filled
506.....Delrin® 150
520.....Injection Molded PVDF Natural color
540.....Nylon
542.....Nylon
544.....Nylon Injection Molded
550.....Polyethylene
551.....Glass Filled Polypropylene
552.....Unfilled Polypropylene
555.....Polyvinyl Chloride
556.....Black Vinyl
557.....Conductive Carbon-filled Polypropylene
558.....Conductive HDPE
570.....Rulon II®
580.....Ryton®
600.....PTFE (virgin material) Tetrafluorocarbon (TFE)
603.....Blue Gylon®
604.....PTFE
606.....PTFE
607.....Envelon
608.....Conductive PTFE
610.....PTFE Encapsulated Silicon
611.....PTFE Encapsulated FKM
632.....Neoprene/Hytrel®
633.....FKM/PTFE
634.....EPDM/PTFE
635.....Neoprene/PTFE
637.....PTFE, FKM/PTFE
638.....PTFE, Hytrel®/PTFE
639.....Nitrile/TFE
643.....Santoprene®/EPDM
644.....Santoprene®/PTFE
656.....Santoprene® Diaphragm and Check Balls/EPDM Seats
661.....EPDM/Santoprene®
666.....FDA Nitrile Diaphragm, PTFE Overlay, Balls, and Seals
668.....PTFE, FDA Santoprene®/PTFE

- Delrin and Hytrel are registered tradenames of E.I. DuPont.
- Nylatron is a registered tradename of Polymer Corp.
- Gylon is a registered tradename of Garlock, Inc.
- Santoprene is a registered tradename of Exxon Mobil Corp.
- Rulon II is a registered tradename of Dixion Industries Corp.
- Ryton is a registered tradename of Phillips Chemical Co.
- Valox is a registered tradename of General Electric Co.

RECYCLING

Many components of SANDPIPER® AODD pumps are made of recyclable materials. We encourage pump users to recycle worn out parts and pumps whenever possible, after any hazardous pumped fluids are thoroughly flushed.

Air Distribution Valve Assembly
With Cast Iron Center

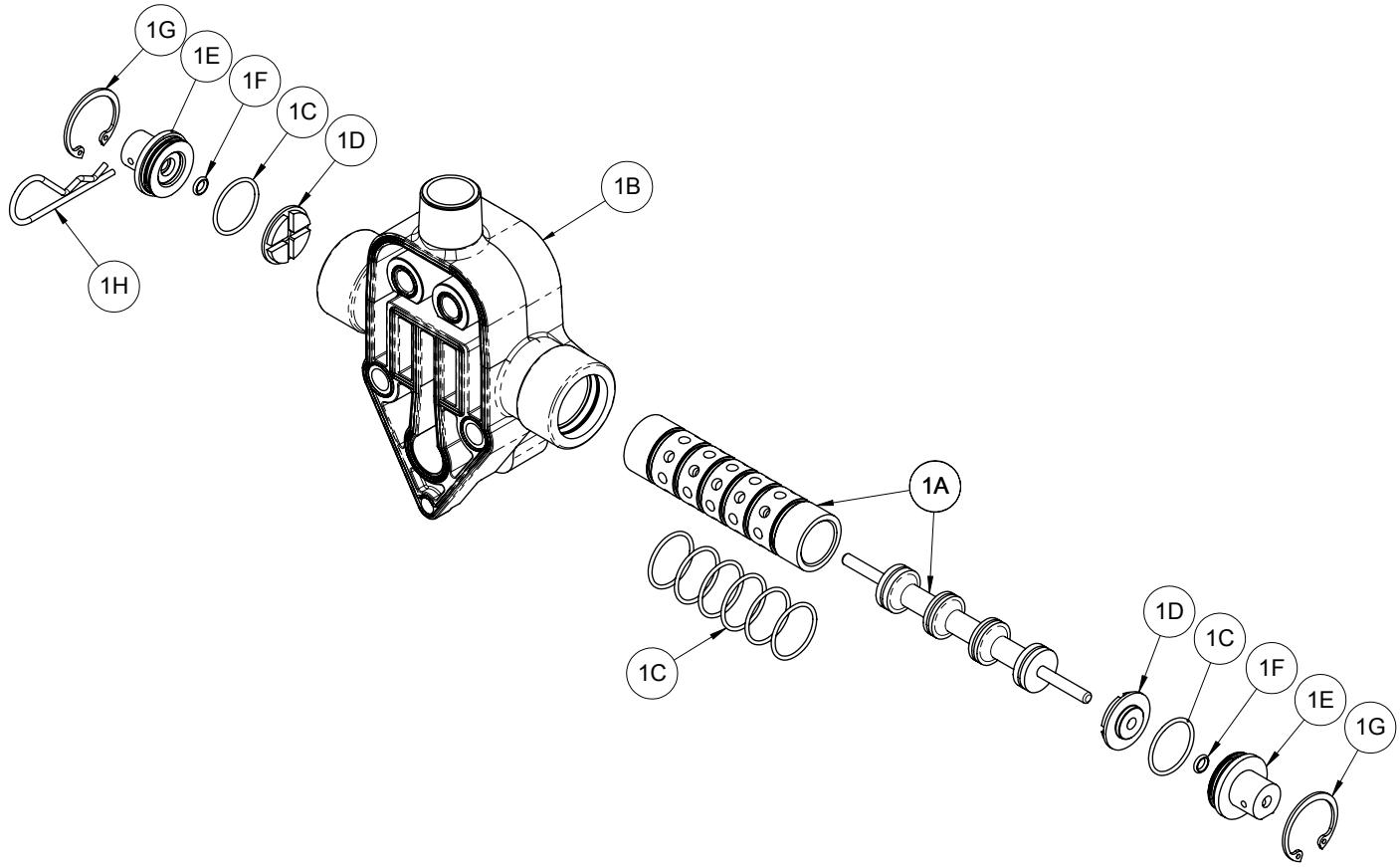

Air Distribution Valve Servicing

See repair parts drawing above.

Step 1: Remove end cap retainer (1G).

Step 2: Remove end cap (1E), bumper (1D) and o-rings (1C and 1F).

Step 3: Remove spool part of (1A) (caution, do not scratch).

Step 4: Press sleeve (1A) from body (1B).

Step 5: Inspect O-Ring (1C) and replace if necessary.

Step 6: Lightly lubricate O-Rings (1D) on spool (1A).

Step 7: Press sleeve (1A) into body (1B).

Step 8: Reassemble in reverse order.

Note: Sleeve and spool (1A) set is match ground to a specified clearance sleeve and spools (1A) cannot be interchanged.

Main Air Valve Assembly Parts List

Item	Part Number	Description	Qty
1	031.111.557	Air Valve Assembly	1
1.A	031.083.000	Sleeve and Spool Set with Pins	1
1.B	095.051.557	Air Valve Body	1
1.C	560.058.360	O-ring	8
1.D	132.028.552	Bumper	2
1.E	165.078.147	End Cap	2
1.F	560.029.360	O-ring	2
1.G	675.043.115	Retaining Ring	2
1.H	210.008.330	Safety Clip	1

LEGEND:

○ = Items contained within Air End Kits

⚠ IMPORTANT

Read these instructions completely, before installation and start-up. It is the responsibility of the purchaser to retain this manual for reference. Failure to comply with the recommendations stated in this manual will damage the pump, and void factory warranty.

Pilot Valve Assembly

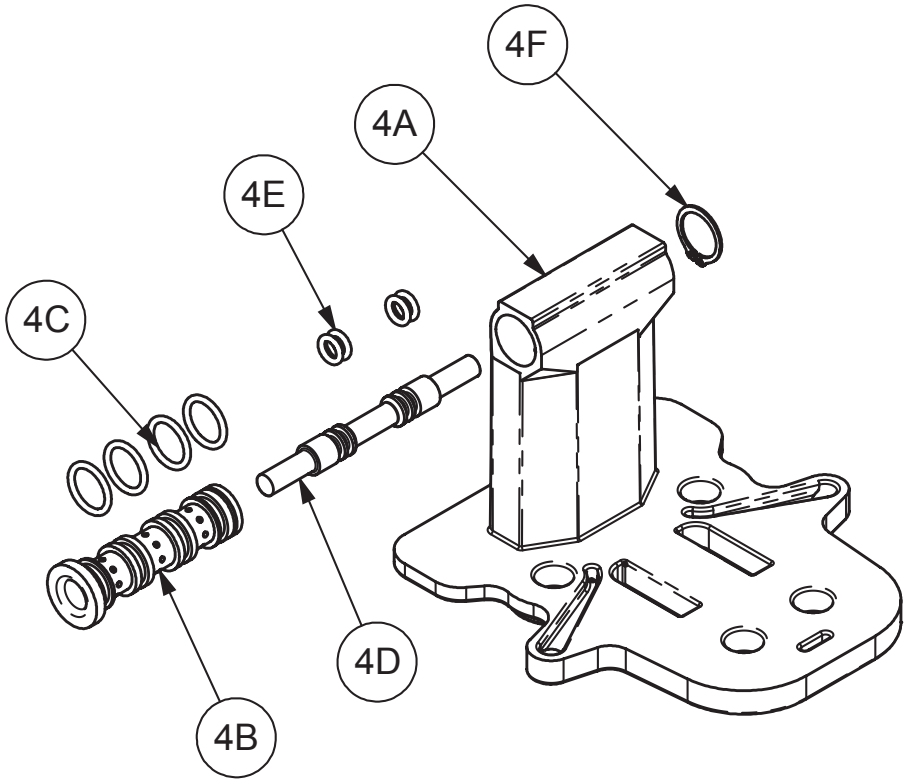

Pilot Valve Servicing

With Pilot Valve removed from pump.

Step 1: Remove snap ring (4F).

Step 2: Remove sleeve (4B), inspect O-Rings (4C), replace if required.

Step 3: Remove spool (4D) from sleeve (4B), inspect O-Rings (4E), replace if required.

Step 4: Lightly lubricate O-Rings (4C) and (4E).

Reassemble in reverse order.

PILOT VALVE ASSEMBLY PARTS LIST

Item	Part Number	Description	Qty
4	095.074.001	Pilot Valve Assembly	1
4A	095.071.557	Pilot Valve Body	1
4B	755.025.162	Pilot Valve sleeve	1
4C	560.033.360	O-Ring	4
4D	775.014.115	Pilot Valve Spool	1
4E	560.023.360	O-Ring	4
4F	675.037.050	Retaining Ring	1

LEGEND:

◯ = Items contained within Air End Kits

5 - YEAR Limited Product Warranty

Warren Rupp, Inc. ("Warren Rupp") warrants to the original end-use purchaser that no product sold by Warren Rupp that bears a Warren Rupp brand shall fail under normal use and service due to a defect in material or workmanship within five years from the date of shipment from Warren Rupp's factory. Warren Rupp brands include Warren Rupp®,SANDPIPER®, MARATHON®, PortaPump®, SludgeMaster™ and Tranquilizer®.

~ See sandpiperpump.com/content/warranty-certifications for complete warranty, including terms and conditions, limitations and exclusions. ~

WARREN RUPP, INC.

Declaration of Conformity

Manufacturer: Warren Rupp, Inc., 800 N. Main Street
Mansfield, Ohio, 44902 USA

Certifies that Air-Operated Double Diaphragm Pump Series: HDB, HDF, M Non-Metallic, S Non-Metallic, M Metallic, S Metallic, T Series, G Series, U Series, EH and SH High Pressure, RS Series, W Series, SMA and SPA Submersibles, and Tranquilizer® Surge Suppressors comply with the European Community Directive 2006/42/EC on Machinery, according to Annex VIII. This product has used Harmonized Standard EN809:1998+A1:2009, Pumps and Pump Units for Liquids - Common Safety Requirements, to verify conformance.

David Roseberry
Signature of authorized person

October 20, 2005
Date of issue

David Roseberry
Printed name of authorized person

Engineering Manager
Title

Revision Level: F

August 23, 2012
Date of revision

IDEX

CE

WARREN RUPP, INC.

EC / EU Declaration of Conformity

The objective of the declaration described is in conformity with the relevant Union harmonisation legislation: Directive 94/9/EC (until April 19, 2016) and Directive 2014/34/EU (from April 20, 2016).

Manufacturer:
Warren Rupp, Inc.
A Unit of IDEX Corportion
800 North Main Street
P.O. Box 1568
Mansfield, OH 44902 USA

Applicable Standard:
EN13463-1: 2001
EN13463-5: 2003
EN60079-25: 2004
Harmonised Standard:
EN13463-1: 2009
EN13463-5: 2011
EN60079-25:2010

The harmonised standards have been compared to the applicable standards used for certification purposes and no changes in the state of the art technical knowledge apply to the listed equipment.

AODD Pumps and Surge Suppressors
Technical File No.: 203104000-1410/MER

AODD (Air-Operated Double Diaphragm) Pumps
EC Type Examination Certificate No. Pumps: KEMA 09ATEX0071 X

DEKRA Certification B.V. (0344)
Meander 1051
6825 MJ Arnhem
The Netherlands

Hazardous Locations Applied:

I M1 c
II 2 G Ex ia c IIC T5
II 2 D Ex c iaD 20 IP67 T100°C
II 2 G Eex m c II T5
II 2 D c IP65 T100°C
II 1 G c T5
II 1 D c T100°C
II 2 G c T5
II 2 D c T100°C

SANDPIPER®
A WARREN RUPP, INC. BRAND

Tranquilizer®

DATE/APPROVAL/TITLE:
18 March 2016

David Roseberry
David Roseberry, Director of Engineering

IDEX